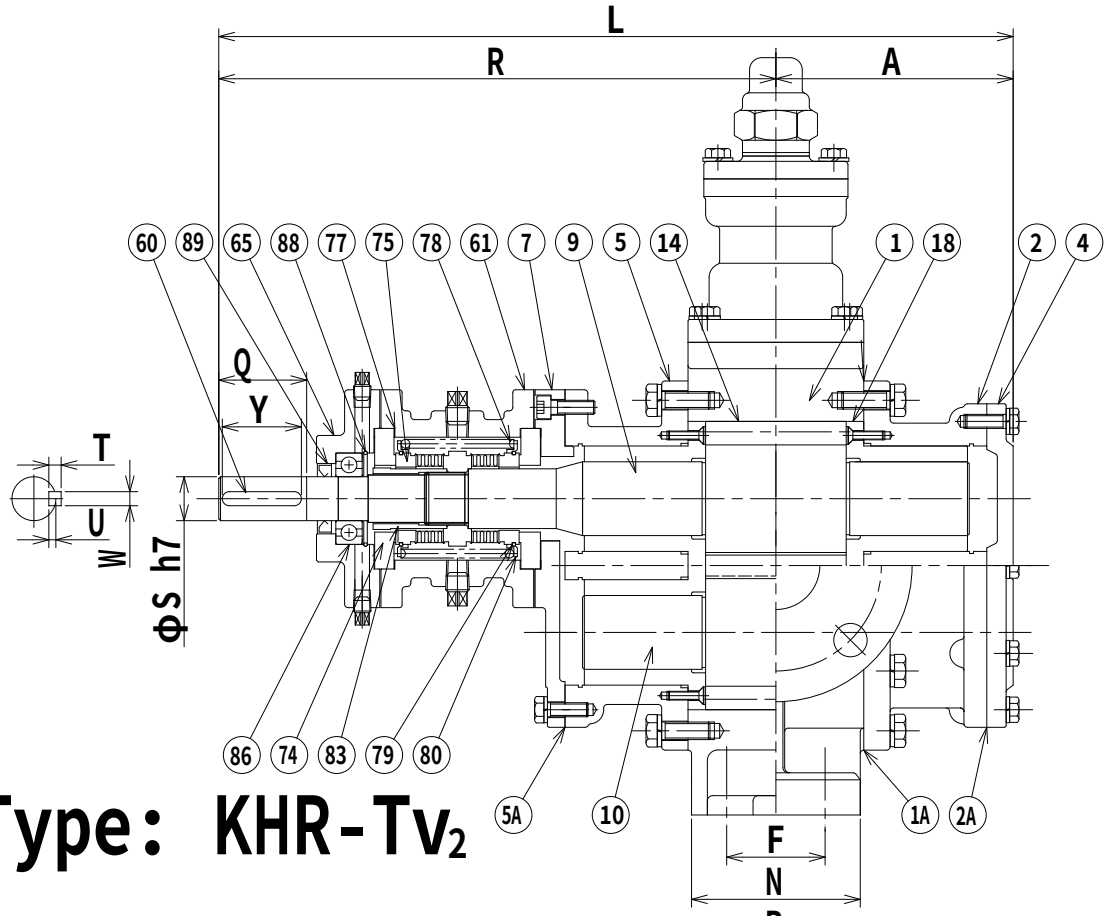

Type: KHR-Tv$_2$

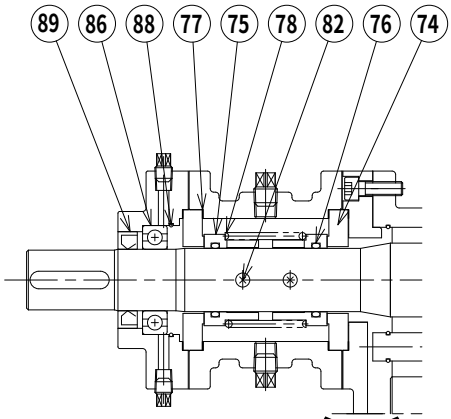

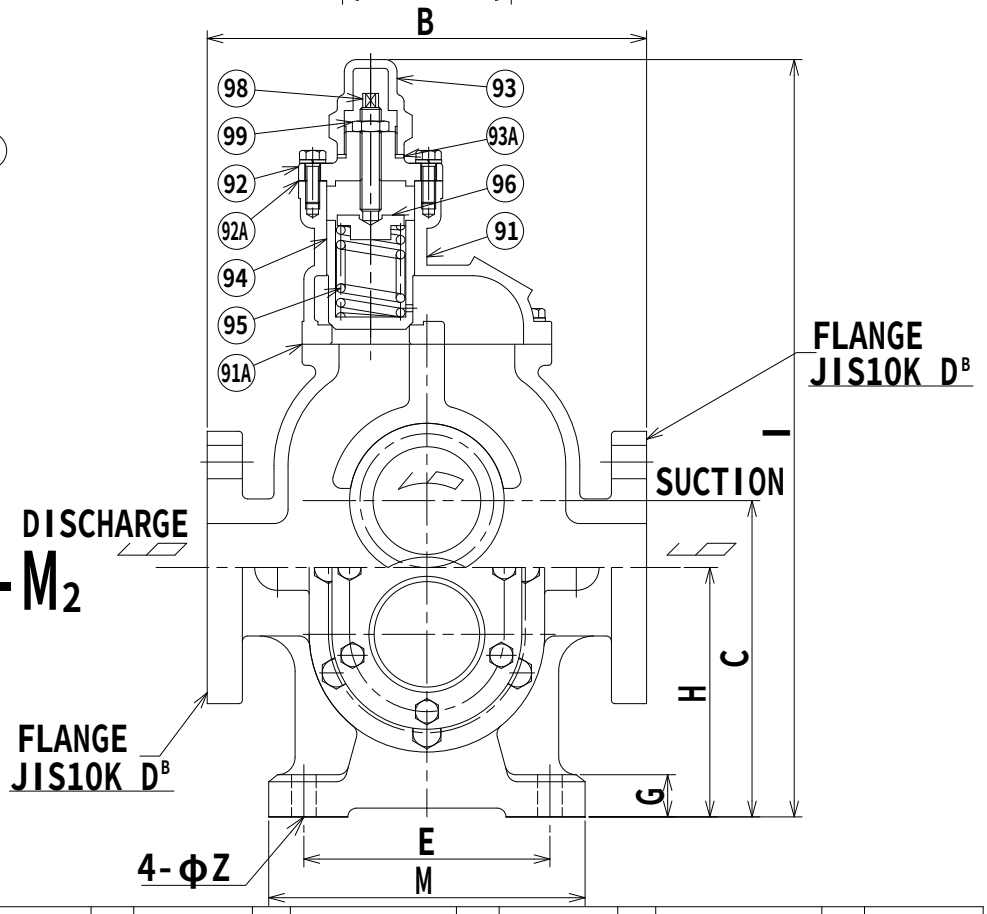

Type: KH(R)-M$_2$

No.	NAME	QUANT.	MATERIAL	No.	NAME	QUANT.	MATERIAL	No.	NAME	QUANT.	MATERIAL	No.	NAME	QUANT.	MATERIAL
99	RV. LOCK NUT	1	SS400												
98	RV. ADJUST. SCREW	1	SS400	89	MECH. B. OIL SEAL	1	NBR					10	DRIVEN SHAFT	1	SCM435H HARDENING
96	RV. SP. SUPPORTER	1	S45C	88	MECH. B STOP RING	1	SWP	82	MECH. COUPLER	1	SUS304	9	DRIVE SHAFT	1	SCM435H HARDENING
95	RV. SPRING	1	SWP	86	MECH. BALL BEARING	1	SUJ	76	MECH. O-RING	1	NBR	7	R.B. COVER	1	FC250
94	RV. VALVE	1	FC250	83	MECH. LOCK NUT	1	S45C					5A	REAR COVER PACKING	1	PACKING PAPER
93A	RV. CAP PACKING	1	CARBON FIBER	80	MECH.SP. SUPPORTER	2	SUS304	65	GLAND COVER	1	FC250	5	REAR COVER	1	FC250
93	RV. CAP	1	FC250	79	MECH.SP. STOP RING	2	SUS304	61	GLAND CASE	1	FC250	4	F.B. COVER	1	FC250
92A	RV. COVER PACKING	1	CARBON FIBER	78	MECH. SPRING	1	SUS304	60	KEY	1	S45C	2A	FRONT COVER PACKING	1	PACKING PAPER
92	RV. COVER	1	FC250	77	MECH. PACKING	4	PTFE					2	FRONT COVER	1	FC250
91A	RV. CASE PACKING	1	PACKING PAPER	75	MECH. ROTATION RING	1	SUS304/METC016C	18	SIDE PLATE METAL	4	BC6	1A	CASE PACKING	2	PACKING PAPER
91	RELIEF VALVE CASE	1	FC250	74	MECH. SEAL RING	2	CARBON	14	GEAR	2	S45C	1	CASE	1	FC250